identium®
Creating identities for all

USER MANUAL

IT4RL

Desktop UHF RFID Label Printer and Encoder

Unpacking, loading labels and ribbon, calibration, printing and encoding with LabelSoft, and the SDK quick start



THIS MANUAL COVERS	VERSION	PLATFORM
IT4RL desktop RFID printer and encoder	–	203 dpi, UHF
LabelSoft label design and encoding software	6.0.2.5	Windows
Printer SDK (DLL, C/C++, C#, Java, Python, web print service)	API manual 1.0.8.9	Windows

Document version 1.1 · November 2026

Identium Tech Solutions Pvt. Ltd.
Plot No. 5, First Floor, Raja Dhirsain Marg, Garhi, Sant Nagar, East of Kailash, New Delhi 110065, India
+91 97181 99516 · 011-4714 7839 · WhatsApp +91 82877 32647 · info@identium.in

www.identiumone.com · www.indiarfidstore.com
Creating identities for all

The IT4RL is a desktop thermal and thermal-transfer label printer with a built-in UHF RFID encoder: it prints text and barcodes on a label and writes data to the label's RFID chip in the same pass, including on-metal labels up to 1 mm thick. This manual covers unpacking, loading labels and ribbon, calibration, printing and encoding with the free LabelSoft software, and a quick start for developers using the SDK in the Resource Hub package.

CONTENTS

01/ Packing List
02/ Equipment Diagram
03/ Power and Connection
04/ Buttons and Indicators
05/ Rear DIP Switches
06/ Loading the Ribbon
07/ Loading the Labels
08/ Installing the Software
09/ Calibrating Labels and RFID
10/ Printing and Encoding a Test Label
11/ Reading Tags and Using Tag Data
12/ For Developers: SDK Quick Start
13/ Precautions and Care
14/ Parameters
15/ Troubleshooting
16/ Support

01/ Packing List

Check the box against this list as soon as it arrives, and look over the printer and accessories for transport damage. If anything is missing or damaged, contact Identium before you set the printer up. Keep the box and packing for moving or servicing the printer.

Item	Qty	What it is for
IT4RL desktop RFID printer	1	Prints labels and encodes their UHF RFID chips
Power adapter (24 V DC output) with AC power cord	1	Powers the printer
Ribbon spindles	2	One carries the new ribbon roll, the other the empty take-up core
Label roll spindle	1	Holds the label roll inside the printer
Label roll guides	2	Hold the roll centred on the spindle
Large-core adapters	2	Fit label rolls with a 3-inch core onto the spindle

Software, SDK and documents are in the IT4RL package on the Identium Resource Hub: **www.identiumone.com/resourcehub/** › *iT4RL Identium Printer – SDK & Manual*.

Labels and ribbon are consumables. Identium supplies UHF RFID label rolls and a 110 mm × 300 m wax-resin thermal-transfer ribbon at **www.indiarfidstore.com**.



Label roll spindle, the two roll guides and the two large-core adapters

02/ Equipment Diagram



Front view

1. Consumables viewing window: check the labels and ribbon without opening the cover
2. Top cover: lift it to load labels and ribbon (press the release buttons on both sides)
3. Key panel: three lights and three buttons (section 04)
4. Label exit: printed labels come out here

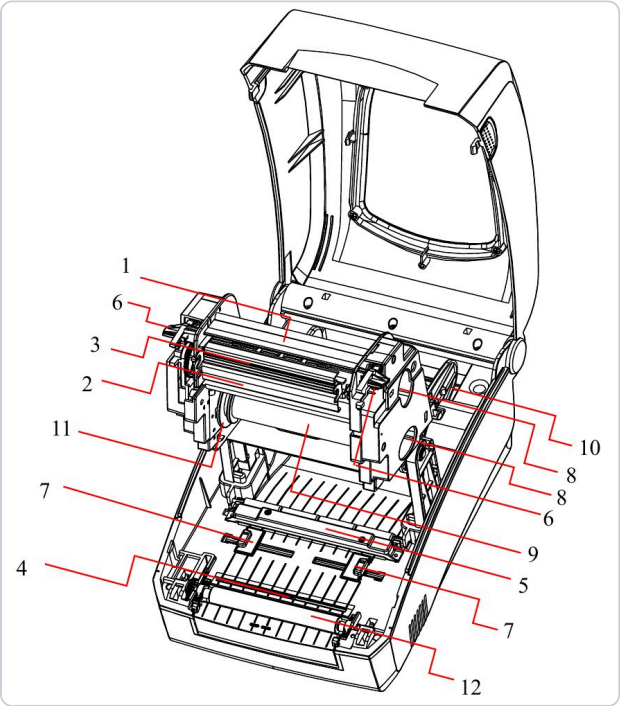

Inside, top cover open

1. Print head module
2. Print head holder
3. Print head
4. RFID antenna and reflective (black-mark) sensor
5. Transmissive (gap) sensor
6. Print head locking buckles, one each side
7. Label edge guides
8. Ribbon release rods
9. Ribbon supply compartment
10. Label roll compartment
11. Ribbon supply wheel
12. Platen (rubber) roller

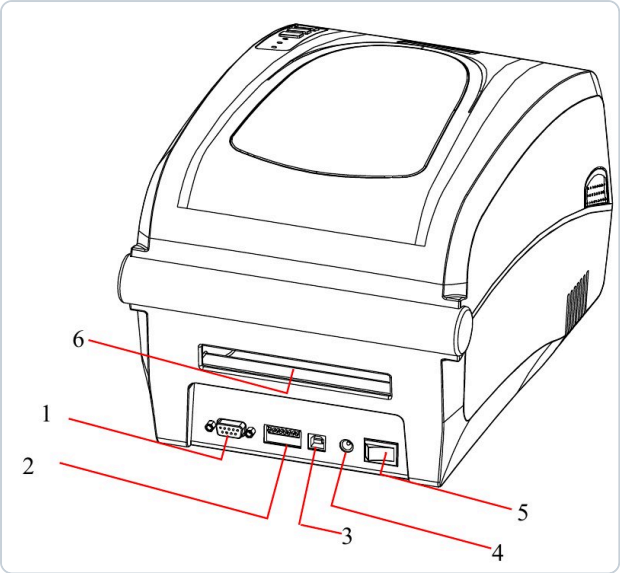

Rear view

1. Serial port (RS-232)
2. DIP switches (section 05)
3. USB port
4. Power socket, 24 V DC
5. Power switch
6. External label feed slot, for a roll on an external holder

NOTE

USB is the standard connection. A TCP/IP network interface is available as an option; the ports fitted depend on the configuration you ordered. A networked printer is added in LabelSoft with **Add a Net Printer** on the **Printer** tab of **Label Setup**; it receives print data on TCP port 9100.

03/ Power and Connection

Connect the power

1. Make sure the power switch on the rear panel is at **O** (off).
2. Plug the adapter's DC lead into the power socket on the rear of the printer.
3. Connect the AC cord to the adapter, then plug it into a wall socket (100–240 V AC, 47–63 Hz).

CAUTION

Use only the power adapter supplied with the printer (24 V DC output). Do not switch the printer on in a damp place, and do not use a damaged cord.

Connect the computer

1. Switch the printer off before you connect or disconnect the data cable.
2. Connect a USB cable from the printer's USB port to the PC.
3. Keep the cable short (1.8 m or less is recommended) and do not wrap the power cord around it.

The printer detects by itself which port a job arrives on, so there is nothing to select. Send each job through one port only and let it finish before you use another port.

Switch on and off

- **On:** press the power switch to the **I** (line) side. When the **Ready** light stays on, the printer is ready.
- **Off:** press the switch to the **O** side. Switch the printer off when it will not be used for a long time.

04/ Buttons and Indicators

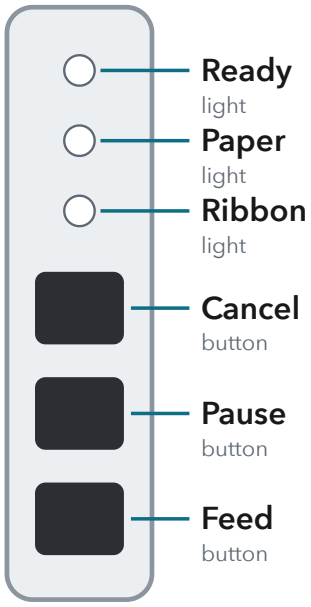

Key panel layout (illustration)

The key panel on the right of the top cover has three lights (**Ready**, **Paper**, **Ribbon**) and three buttons (**Cancel**, **Pause**, **Feed**). Each button has a second function when you hold it for about 5 seconds with the printer in standby.

Button	Press	Hold about 5 s
Feed	Feeds labels to the start of the next label	Calibrates the labels and the RFID position (section 09)
Pause	Pauses printing; press again to resume	Self-test: prints a configuration report
Cancel	Clears the print job; returns the printer to work after a fault is cleared	Factory reset (see below)

Indicator lights

Light	On steady	Off	Flashing
Ready	Normal standby	–	On its own: printer paused. With another light: a fault (section 15)
Paper	Label sensor working normally	–	On its own: receiving data
Ribbon	Thermal-transfer mode, ribbon needed	Direct-thermal mode, no ribbon needed	With Ready: ribbon not detected

When all three lights flash together, the printer has entered a hold-button function (calibration, self-test or reset). Wait until the lights return to steady.

Print a self-test report

1. With the printer in standby, hold **Pause** for about 5 seconds until the three lights flash, then release it.
2. The printer prints its model and product number, firmware version, hardware settings and status, print mode (thermal or thermal transfer) and font list, then the lights return to steady.

Restore factory settings

1. With the printer in standby, hold **Cancel** for about 5 seconds until the three lights flash.
2. Release **Cancel**, then press it once more.
3. When the lights stop flashing and stay on, the reset is complete.

If you release **Cancel** and do nothing, the printer returns to normal after about 5 seconds without resetting. The printed-label count and printed length are kept through a reset.

> **CAUTION**
> A factory reset clears the settings stored in the printer: label size and sensor settings, darkness, speed, and the RFID read/write power and position. Use it only as a last resort, and afterwards calibrate the labels and RFID again (section 09).

05/ Rear DIP Switches

Eight DIP switches on the rear panel set the print method, the RFID module, the label sensor and the serial speed. **Down is ON** (the block is marked ON ↓). Switch the printer off before changing a switch, then switch it on again for the change to take effect.

Switch	ON (down)	OFF (up)	Factory setting
1	Direct thermal (no ribbon)	Thermal transfer (with ribbon)	OFF
2	RFID module off: plain labels	RFID module on: RFID labels	OFF
3	–	Normal operation	OFF (keep OFF)
4	–	Normal operation	OFF (keep OFF)
5	Transmissive (gap) sensor	Reflective (black-mark) sensor	ON
6	IP address setting allowed	IP address setting locked; keep OFF	OFF
7 and 8	Serial speed (table below)	Serial speed (table below)	OFF, OFF

Switches 7 and 8	OFF, OFF	ON, OFF	OFF, ON	ON, ON
Serial speed	9600	19200	38400	57600

Serial settings: 8 data bits, no parity, 1 stop bit

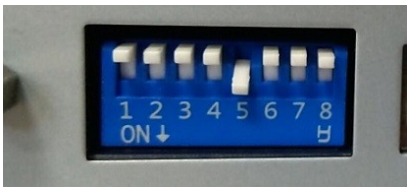

A **RFID labels, gap sensor**
Switch 5 down (ON), all others up

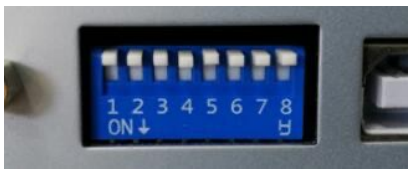

B **RFID labels, black-mark sensor**
All switches up (OFF)



C **Plain labels, gap sensor**
Switches 2 and 5 down (ON)

Common settings. Use the gap sensor for labels separated by gaps or holes, and the black-mark sensor for labels with a black mark printed on the back.

> **TIP**
> The DIP switches take priority over the print-method and sensor settings in the software, so set them first.

06/ Loading the Ribbon

A ribbon is needed for thermal-transfer printing, when the **Ribbon** light is on. Direct-thermal labels need no ribbon (DIP switch 1 ON); skip this section for them.

- Ribbon width up to 110 mm, length up to 300 m, roll diameter up to 70 mm.
- Core 25.4 mm (1 inch) or 12.7 mm (0.5 inch).
- **Ink side out**: the coated side faces outward on the roll.
- A ribbon narrower than 110 mm goes in the centre of the spindle; use the scale on the spindle.



Labels and ribbon loaded, print head module closed

1. Press the release buttons on both sides and lift the top cover.
2. Pull the locking buckles on both sides of the print head module and lift the module to reach the ribbon supply compartment.
3. Slide a ribbon spindle into the core of the new ribbon roll.
4. Snap the roll into the supply compartment. The two tabs on the left of the spindle must engage the supply wheel.
5. Lower the print head module and bring the ribbon end forward over it.
6. Slide the second spindle into an empty core, tape the ribbon end to the core, and snap it into the take-up position; its tabs engage the take-up wheel.
7. Turn the take-up wheel until the ribbon is tight and smooth.
8. Press down on both sides of the print head module until the buckles lock with a click.

TIP

Match the ribbon to the labels: wax-resin for paper and coated-paper labels, resin for synthetic labels. Identium's 110 mm × 300 m wax-resin ribbon suits its paper RFID label rolls; give the printer model when you order so the core and wind are right.

CAUTION

Use good-quality ribbon and labels. Dust, grit and glue on labels, or corrosive chemicals in a poor ribbon, damage the print head.

07/ Loading the Labels

The IT4RL takes UHF RFID labels and plain labels on a roll: label width 20–114 mm (0.8–4.5 in), roll diameter up to 127 mm, core at least 25.4 mm (1 inch), thickness 0.06–1 mm including the backing. On-metal (anti-metal) RFID labels up to 1 mm thick can be used.

1. Press the release buttons on both sides and lift the top cover.

2. Take out the label roll spindle and slide the label roll onto it, labels facing up and feeding off the top of the roll towards the front. For a roll with a 3-inch core, fit the large-core adapters first.
3. Push the two roll guides onto the spindle from both ends, smooth side towards the roll, until they touch the roll.
4. Put the spindle back in the label roll compartment and centre the roll using the scale on the spindle.



3-inch core: fit the adapters to the guides



Roll on the spindle, a guide each side



Guides pressed against the roll



Spindle placed in the label compartment

5. Pull the locking buckles on both sides and lift the print head module.
6. Pass the labels under the guide shaft and through the label sensor. Slide the two label edge guides against the edges of the labels without bending them.
7. Draw the labels over the platen roller and centre them.
8. Press down on both sides of the print head module until it clicks, then close the top cover.
9. Press **Feed**. The printer moves the labels to the start of the next label.

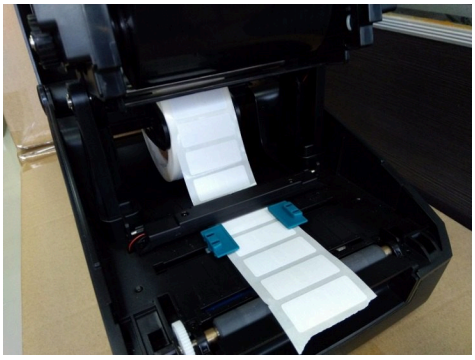

Labels passing under the guide shaft and between the edge guides

Large rolls

If the roll is too large for the label compartment, put it on an external roll holder (optional) behind the printer and feed the labels through the external label feed slot on the rear panel.

> **NOTE**
> Calibrate the printer whenever you load a new type or size of label (section 09).

08/ Installing the Software

Install LabelSoft

1. Download the IT4RL package from the Resource Hub and unzip it. Then unzip `LabelSoft.zip` to a folder on the PC, for example `C:\LabelSoft`.
2. Open the folder and run `LabelSoft.exe`. LabelSoft runs straight from its folder; there is no installer.
3. To change the display language, open **Option › Language**.
4. Connect the printer by USB and switch it on.

System requirements: Windows 7, 8, 8.1, 10 or 11. The package readme also lists Windows XP and Vista; Windows XP needs .NET Framework 2.0 installed first.

File in the package	What it is
`LabelSoft.zip`	LabelSoft: label design, printing and RFID encoding software for Windows
`Development package.zip`	The SDK for developers (section 12)

The IT4RL package on the Identium Resource Hub: www.identiumone.com/resourcehub/ › iT4RL Identium Printer – SDK & Manual

> **NOTE**
> The LabelSoft screens in this manual were taken in an earlier version of LabelSoft. The version in the package works the same way, but some windows may look slightly different.

Printer driver

LabelSoft and the SDK send labels straight to the printer over USB, so no Windows printer driver needs to be installed. When no printer driver is present, LabelSoft lists the printer by its USB name, **iDENTIUM IT4R**. You can also choose this mode with **Use Printer Non-Driver** on the **Printer** tab of **Label Setup**.

09/ Calibrating Labels and RFID

Calibrate when you load labels for the first time and again whenever you change to a label of a different size or type. Calibration teaches the printer where each label starts and where its RFID chip sits over the antenna.

1. Set the label sensor

- **Labels with gaps or holes:** use the transmissive (gap) sensor, DIP switch 5 ON. This sensor is fixed in place.
- **Labels with a black mark on the back:** use the reflective (black-mark) sensor, DIP switch 5 OFF. Lift the print head module and slide the sensor sideways until it sits under the black mark. Use a non-metal tool such as a plastic pen.

2. Calibrate from the printer

1. Load the labels (and ribbon), close the top cover and wait for the **Ready** light to stay on.
2. Hold **Feed**. After about 5 seconds the three lights flash together and the printer feeds labels. Release **Feed**.
3. When the lights stop flashing and stay on, calibration is complete.

3. Calibrate RFID in LabelSoft

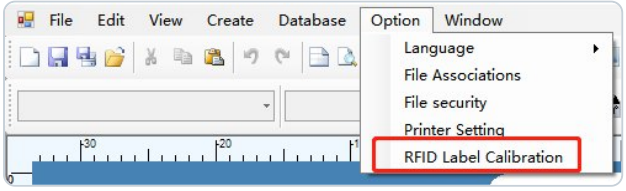

Option › RFID Label Calibration

1. In LabelSoft choose **Option › RFID Label Calibration**.
2. Select the printer under **Connected Printer**. Click **Refresh** if the list is empty.
3. For a first calibration set **Read Power** 15 dBm, **Write Power** 20 dBm and **Calibration mode** 1, then click **Setting** to send the values to the printer.

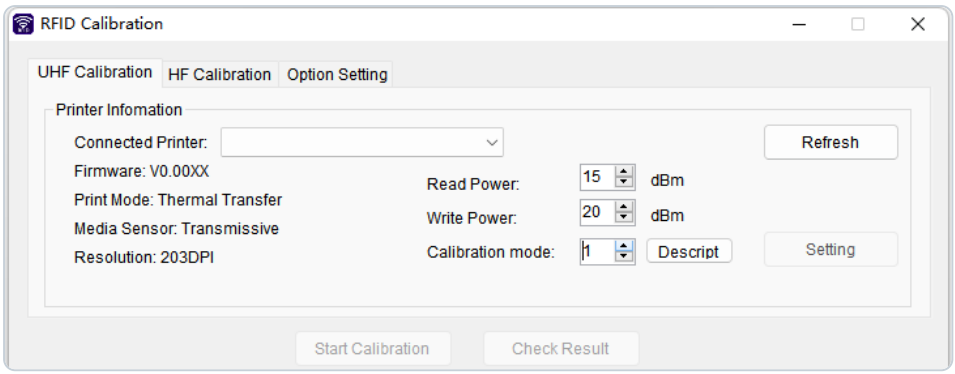

RFID Calibration window before calibration (the results appear below these settings)

4. When the **Paper** and **Ribbon** lights flash together, switch the printer off and on, wait for **Ready** to stay on, then reopen the calibration window. The printer applies the new values only after this restart.
5. Click **Start Calibration**. The printer feeds labels while LabelSoft plots the label calibration curve and the RFID signal range in the lower half of the window.
6. Read the result beside the signal range: label height, signal area and **Read/Write position**. The larger the signal range, the easier the labels are to read and write.
7. To fine-tune, type a value in **Set R/W position** (mm) and click **Set**. When the **Paper** and **Ribbon** lights flash together, switch the printer off and on again.

> **TIP**
> Calibration mode 0 shows every RFID signal (for diagnosis), mode 1 only the current tag's signal, and mode 2 lets printers with recent firmware find a stable power by themselves (**Descript** explains the modes). The settings are stored in the printer, so repeat them only for a new label type.

10/ Printing and Encoding a Test Label

This example makes a 44 × 18 mm RFID label with a barcode, then writes an EPC to its chip in the same pass.

1. Set the label size

1. Measure the label with a ruler, without the gap: in this example 44 mm wide and 18 mm high.
2. Choose **File › New**. The **Label Setup** window opens.
3. On the **Printer** tab, select the printer (it is listed as **iDENTIUM IT4R**).
4. On the **Label** tab, enter **Width** and **Height** and choose the **Shape**. Under **Gap**, enter the gap between labels in **Vert.** (leave **Hori.** as it is for a single-column roll). Leave **Columns** and **Rows** at 1.
5. Click **OK**. A blank label opens in the designer.

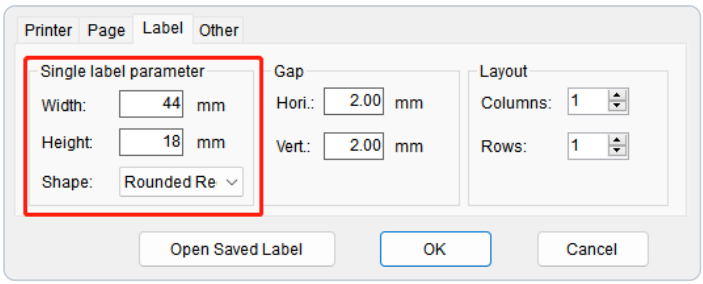

Label Setup › Label tab for a 44 × 18 mm label

2. Add text, a barcode and the RFID object

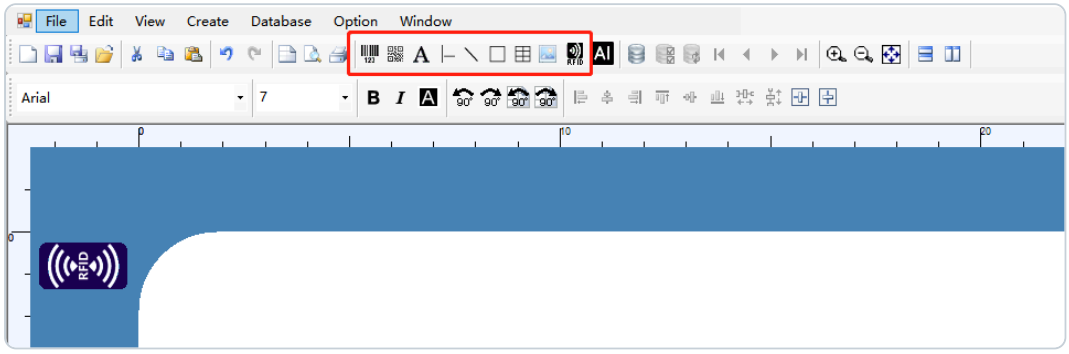

The object buttons (outlined) add a barcode, 2D code, text, line, shape, table, picture or RFID object. The RFID object appears as a small RFID icon beside the label.

1. Click the barcode button, then click on the label to place a barcode. Double-click it to set its data, type and size.
2. Add text the same way with the **A** button.
3. Click the **RFID** button to add the RFID object to the label.

3. Set the EPC to write

1. Double-click the RFID icon to open **RFID Properties**.
2. On **Data Source**, set **Data Type** to **Fixed** and type the EPC in hexadecimal (24 characters for a 96-bit EPC). Choose **SerialNo** to number labels automatically, or **Database** to take EPCs from an Excel sheet or database.
3. On **RFID Encoder**, check that **Encoder types** is *UHF EPC Gen 2/ISO 18000-6C*, the data type is **Hexadecimal** and **Data Area** is **EPC**.
4. Set **The printer will pause after __ consecutive errors** to the number of failed tags you will accept before the printer stops. Click **OK**.

4. Print

1. Choose **File › Print**, enter the **Quantity** and **Copies**, then click **Print**.
2. The printer prints each label and writes its chip in one pass. When the printer detects a write error it stops and the **Ready** and **Paper** lights flash alternately (section 15).

> **TIP**
> At the start of each run, and after any fault, check a few encoded labels with an RFID reader to confirm that each chip holds the data you expect.

CAUTION

If LabelSoft reports a printer error and asks whether to continue sending print data, clear the fault on the printer first (lights steady). Continuing through a label or RFID fault can leave labels with unwritten chips.

11/ Reading Tags and Using Tag Data

Print the chip's TID or EPC on the label

The printer can read each chip before printing and put its factory TID (or its EPC) on the same label as text or a barcode, for easy cross-checking.

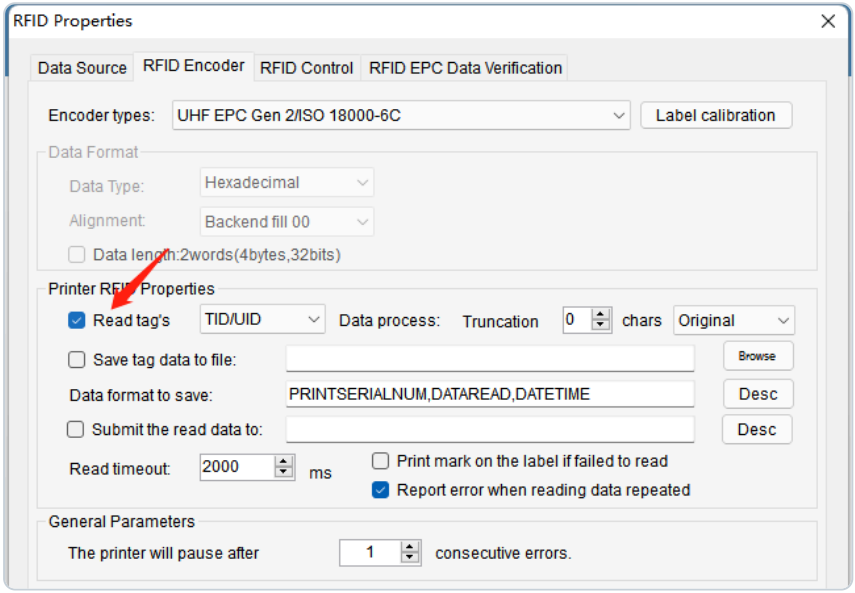

RFID Properties › RFID Encoder, set to read each tag's TID. The record-and-send options below are on this tab too.

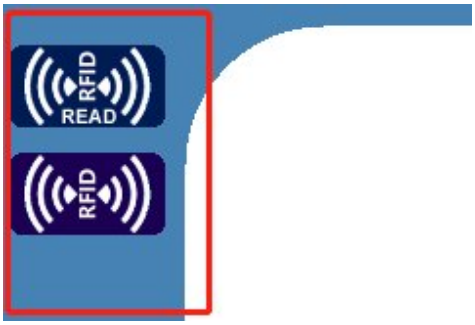

READ icon: the tag is read before it is written

1. In the RFID object's **RFID Properties › RFID Encoder**, tick **Read tag's** and choose **TID/UID** (or EPC). On **Data Source**, the substring type becomes **Read UHF tag**.
2. Open the barcode or text object's properties and, on its **Data Source**, set **Data Type** to **Read UHF tag**. The object now carries the value read from the chip.
3. Print as usual. Each label's chip is read first and the label is printed with its own TID.

Record and send what was encoded

- **Save tag data to file** saves the tag data of each label to a text file you choose. **Data format to save** sets the fields, for example print serial number, data read and date/time.
- **Submit the read data to** sends the data read from each tag to a web address (your API), so your own system receives it as labels are printed.
- **Report error when reading data repeated** reports an error when the same tag data is read twice, so duplicate tags are caught.

- **Print mark on the label if failed to read** prints a mark on any label whose chip could not be read.

Print from Excel or a database

Database › Setup Database links the label to an Excel sheet, a text file, or a MySQL or SQL Server (ODBC) database. Use **Database** as the data type for the text, barcode and RFID objects, and each row prints and encodes one label. **Database › Select Record** picks the rows to print.

12/ For Developers: SDK Quick Start

`Development package.zip` holds everything needed to drive the IT4RL from your own Windows software. Its core is the printer SDK library (a 32- and 64-bit Windows DLL in the package's SDK folder), which builds the printer's command language for you; the same commands can also be sent raw.

Folder or file	Contents
Command-language manual (Word, top-level folder)	Text, barcode, graphics and UHF RFID commands, for printing without the SDK library
`SDK/C++ library/`	The printer SDK library (32-bit and 64-bit DLL), the Visual C++ x64 runtime, and `DEMO.txt`, a complete print-and-encode example
`SDK/C#/PrinterDEMO_UHF_C#/`	Visual Studio C# demo (`PrinterDEMO.sln`, x86): sample print, print with EPC writing, and read TID then print
`SDK/Net DLL/`	A .NET wrapper class with the DllImport declarations for the SDK library
`SDK/java/`	Java library (.jar) with JNA, four demos (USB and network, with and without a LabelSoft template), status and TID-reading notes
`SDK/python/`	`print_DEMO.py`: loads the 64-bit DLL with ctypes and prints a test label
Web print service (in `SDK/`)	A local WebSocket print service plus four HTML samples, including RFID writing
API guide (Word and PDF, in `SDK/`)	Full API reference (every function, its parameters and error codes) and step-by-step examples: plain print, UHF write, read TID and print, network printing

Run a demo

1. Load labels, connect **one** IT4RL by USB and switch it on. No printer driver is needed: the SDK library opens the USB printer directly.
2. **Python:** install the Visual C++ x64 runtime supplied in the package's SDK folder, then run `python print_DEMO.py` with 64-bit Python. It prints four lines of text on a 100 × 50 mm label.
3. **C#:** open `PrinterDEMO.sln` in Visual Studio, build for x86 and run. The three buttons print a sample label, print labels while writing serial-number EPCs, and read each tag then print what was read.

Integrate in five steps

1. Open the port: USB = 255; COM1–COM3 = 4–6. No driver is needed.

2. Clear the buffer and set the label format in dots: width 800, height 400, gap 16 (a 100 × 50 mm label with a 2 mm gap at 8 dots/mm), darkness 10, speed 4.
3. Set the RFID write: mode 1, hexadecimal, start 0, 12 bytes, area 1 = EPC, data `112233445566778899AABBCC`.
4. Draw the text and a Code 128 barcode.
5. Print 1 label, 1 copy, then close the port.

This is the call order for the printer SDK library; the API guide in the package's SDK folder gives each function's name and parameters. The C#, Java and Python demos follow the same order.

- **Read before writing:** the SDK's USB tag-read function reads the tag's TID or EPC at the power you give it (15 dBm is a good starting value) without opening the port, and returns `X` when no tag was read. The API guide lists the data-area values; confirm them on a tag whose TID and EPC you know before you rely on them.
- **Lock the EPC:** the SDK's password-lock function sets an 8-digit hexadecimal access password and locks the EPC area; mode 0 unlocks it with the same password. Record the access password: without it the locked EPC cannot be changed.

Printer status codes

Code	Meaning	Code	Meaning
0	Ready	83	Label detection error: check loading; calibrate after changing label size
1	Busy, retrying: wait and query again	88	Paused: press Pause
4	Printing	89	Labels used up
81	Main board fault: contact Identium	90	RFID tag read or write error
82	Ribbon detection error	91, 92	RFID signal calibration error

Returned by the SDK's printer-status query; see `SDK/java/JavaDemo/status.txt`.

Raw commands and web pages

Raw commands. To print without the SDK library, send the printer's command language as plain text: set the label size, add text and barcodes, add an `RF` command with the data to write, and finish with `W` to print. The *UHF RFID Command Set* chapter of the command-language manual in the package has a complete print-and-encode job.

Web pages. Run the web print service from the package's SDK folder (Windows 7 or later, .NET 4.5) on the PC that has the printer; it sits in the system tray. A page connects to `ws://<PC address>:1808/` and sends the SDK functions as text, each as the function name followed by its parameters separated by `|` (the four HTML samples show complete jobs). Other PCs, phones and tablets on the same network can print through it. Right-click the tray icon to set it to start with Windows.

13/ Precautions and Care

- Use only the power adapter supplied with the printer and check that the mains supply matches its label. Do not use a damaged cord, do not bend or pull the cord hard, and do not put heavy objects on it. Unplug by holding the plug.
- Use the printer indoors, on a level, sturdy surface, away from damp, heat and cold. Do not block its ventilation openings.
- Do not knock or drop the printer.
- Switch the printer off when it will not be used for a long time.
- The print head gets hot while printing. Do not touch it, and do not scratch it with hard objects. Static electricity can damage the print head and electronics.
- Keep liquids away from the print head.
- This printer contains a radio (RFID) transmitter and may interfere with nearby equipment. If it does, move the printer or the equipment.
- Do not open the printer or its power adapter. For service, contact Identium.

Cleaning

> **CAUTION**
> Switch the printer off before cleaning and wait one minute for the print head to cool. Use only anhydrous alcohol of 99% purity or higher.

- **Print head**, at least once for every roll of ribbon: lift the top cover and print head module, remove the ribbon, and wipe the head with a cotton swab moistened with alcohol. Repeat until the swab comes away clean.
- **Platen (rubber) roller**, whenever it is dirty: wipe it with a swab or soft cloth moistened with alcohol, turning the roller by hand.
- **Label path and inside of the case**, regularly: wipe with a soft cloth moistened with alcohol.
- **Label sensors**, when labels are misread or print in the wrong place: blow away dust and paper fragments with a blower bulb. If that is not enough, wipe with a swab moistened with alcohol.

14/ Parameters

Product

Model	IT4RL
Type	Desktop RFID printer and encoder
RFID	UHF, EPC Class 1 Gen 2 / ISO 18000-6C
Label types	UHF soft labels; on-metal (anti-metal) labels up to 1 mm thick; plain labels

Printing

Print method	Thermal transfer and direct thermal
Resolution	203 dpi (8 dots/mm)
Print speed	Up to 8 ips
Throughput	Up to 6,000 labels per hour (print and encode)
Maximum print width / length	108 mm / 4,000 mm
Printer barcodes	Code 39, Code 93, Code 128, Codabar, EAN-8/13/128, Interleaved 2 of 5, UCC-128, UPC-A/E with 2- and 5-digit add-ons; Data Matrix, MaxiCode, PDF417, QR

Labels and ribbon

Label width	Up to 114 mm (4.5 in); minimum 20 mm
Label roll	Outer diameter up to 127 mm; core 25.4 mm (1 in) minimum; 3-inch cores with the large-core adapters
Label thickness	0.06–1 mm including backing
Ribbon	Up to 110 mm wide and 300 m long; roll diameter up to 70 mm; core 25.4 mm or 12.7 mm; ink side out
Label sensors	Movable reflective (black mark) and fixed transmissive (gap)

Connection and software

Interface	USB and RS-232 serial; TCP/IP network optional
Software	LabelSoft label printing and encoding software (free): imports data from Excel, text files, MySQL and SQL Server (ODBC); saves each label's tag data to a text file and can send it to a web address

Power and environment

Power	24 V DC, 2.5 A from the external adapter (input 100–240 V AC, 47–63 Hz)
Dimensions (W × D × H)	208 × 310 × 195 mm
Weight	2.62 kg
Operating environment	0–40 °C, 5–85% RH, non-condensing
Storage environment	−40 to 60 °C, 5–85% RH, non-condensing

Specifications may change without notice; confirm details for your order in the quotation.

15/ Troubleshooting

When the printer has a fault it stops printing and the **Ready** light flashes, usually with another light. Read the lights first, then use the table.

Indicator lights

What you see	Likely cause	What to do
Ready and **Paper** flash together	Labels not detected: loaded wrongly, sensor not over the gap or black mark, labels used up or jammed, roll guides loose	Reload the labels (section 07), check DIP switch 5 and the sensor position, then hold **Feed** 5 s to calibrate. For continuous labels, untick **Label Have Gap/Black mark/Punch** in LabelSoft's printer settings.
Ready and **Paper** flash alternately	RFID read or write error, or RFID signal calibration error	Use the RFID label type you calibrated, run RFID calibration again (section 09), and check the powers and the EPC data (hexadecimal, correct length). Press **Cancel** to clear.
Ready and **Ribbon** flash together	Ribbon used up, jammed, loaded wrongly or missing	Load the ribbon ink side out (section 06), or set DIP switch 1 ON for direct-thermal labels.
Only **Ready** flashes	Paused; DIP switch 3 or 4 set ON; serial speed mismatch; memory overflow	Press **Pause**. Set DIP switches 3 and 4 OFF and match 7 and 8 to the PC. Switch the printer off and on. As a last resort, restore factory settings (section 04), then calibrate again (section 09).
Paper and **Ribbon** flash together	A setting sent from LabelSoft was accepted	Switch the printer off and on to apply it.

Print quality and connection

What you see	Likely cause	What to do
Fixed white lines down the print	Dirty or damaged print head	Clean the print head (section 13). If the lines remain, contact Identium.
Faint or patchy print	Darkness too low or speed too high, dirty parts, or a ribbon that does not suit the labels	Raise the darkness or lower the speed in LabelSoft, clean the print head and roller, and try a ribbon grade that suits the labels.
LabelSoft cannot find the printer, or "connection timed out"	USB cable loose or printer off	Check the cable and power, then in **Label Setup › Printer** click **Use Printer Non-Driver** (**Use Non-Driver** in the Print window).
Data is sent but nothing prints	Wrong printer selected, or an old job is stuck	Select the printer listed as **iDENTIUM IT4R** in LabelSoft, and switch the printer off and on. As a last resort, restore factory settings (section 04), then calibrate again (section 09).

After clearing a fault, press **Cancel** to carry on printing. If you switched the printer off, delete any unsent jobs on the PC before you switch it back on.

16/ Support

For help with installation, integration or a fault that the steps above do not clear, contact Identium. Please keep the product model, the software version shown in the app and a short description (or screenshot) of the problem ready.

Company	Identium Tech Solutions Pvt. Ltd.
Address	Plot No. 5, First Floor, Raja Dhirsain Marg, Garhi, Sant Nagar, East of Kailash, New Delhi 110065, India
Phone	+91 97181 99516 · 011-4714 7839
WhatsApp	+91 82877 32647
Email	info@identium.in
Software and documents	www.identiumone.com/resourcehub/
Buy hardware and tags	www.indiarfidstore.com

This product and its software are updated from time to time; screens and specifications may change without notice. Check the Resource Hub for the latest version of this manual.